Chapter 1

Introduction

When a fast ion collides with an atom or molecule, a variety of processes involving the electrons associated with either the projectile or target can take place. For the most part, it is the study of these electronic interactions that defines the field of atomic collisions physics. The following are some of the simplest one-electron examples:

- *Excitation* - an electron in the target is promoted from the ground bound state to an excited bound state.
- *Single Capture* - one electron is transferred from a bound state of the target to a bound state of the projectile.
- *Ionization* - an electron is promoted out of the target Coulomb well to the continuum.

Of course, there are many other possible reaction channels. For example, an electron on the projectile may be excited or ionized (*loss*), or more complex processes involving multiple electrons can take place. In many cases however, it is the simple systems that

best test theoretical treatments and help us to understand the fundamental interactions found in nature.

Within this framework, the focus of this dissertation is the study of target ionization and, more specifically, the production of low-energy ("soft") continuum electrons, i.e. those with less than a few electron volts of energy. For more than a century, scientists have studied the interactions of ions with matter. When a fast ion interacts with an atom, by far the dominant process is the production of soft electrons [1.1]. This is the case when an ion loses energy in a material, examples of which include the use of ionizing radiation for cancer therapy, ion-implantation in semi-conductors, or damage to satellite electronics due to ionizing cosmic rays. Until very recently, accurate measurements of these ever-present electrons were impossible. Although the cross section for the production of soft electrons is large, differential measurements are difficult, because they are easily perturbed by stray magnetic fields or contact potentials in spectrometers.

The major advance in the research presented in this dissertation is the introduction of a momentum imaging technique to accurately measure the momentum of soft electrons. The advent of accelerator technology that allows bunched projectiles to be focused in time to less than one nanosecond has made electron time of flight measurements possible. This flight time measurement is required in order to determine the complete momentum vector of the electron. In addition, this technique allows for detection of the electron in coincidence with the remainder of the target. This leads to a multi-dimensional phase space where one can observe soft electron spectra as they

depend on parameters. Examples include the final target (“recoil”) ion charge state, the spatial alignment of molecular targets, or the recoil ion or projectile momentum transfer (which is directly related to the collision impact parameter).

1.1 Background

One of the dominant processes in high-energy ion-atom collisions is ionization, which has been the subject of considerable study and discussion since as early as the 1930's [1.2, 1.3]. As is the case in most science, developments in both experiment and theory have pushed the field forward, with increasingly detailed measurements placing more stringent tests on current theoretical models and calculations. At this point, we introduce some general background in order to place the sum of our current work in context. Within each chapter, works more closely related to a particular experiment will be explored.

1.1.1 Ionization Measurements

The amount of detail in investigations of the ionization process has dramatically increased since experiments began. Through the 1950's most measurements were restricted to total ionization cross sections [1.4-1.7]. In 1957 Blauth measured electron

energy distributions for various ejection angles [1.8]. Kuyatt and Jorgenson did the first complete measurements of the angular and energy dependence of the differential cross

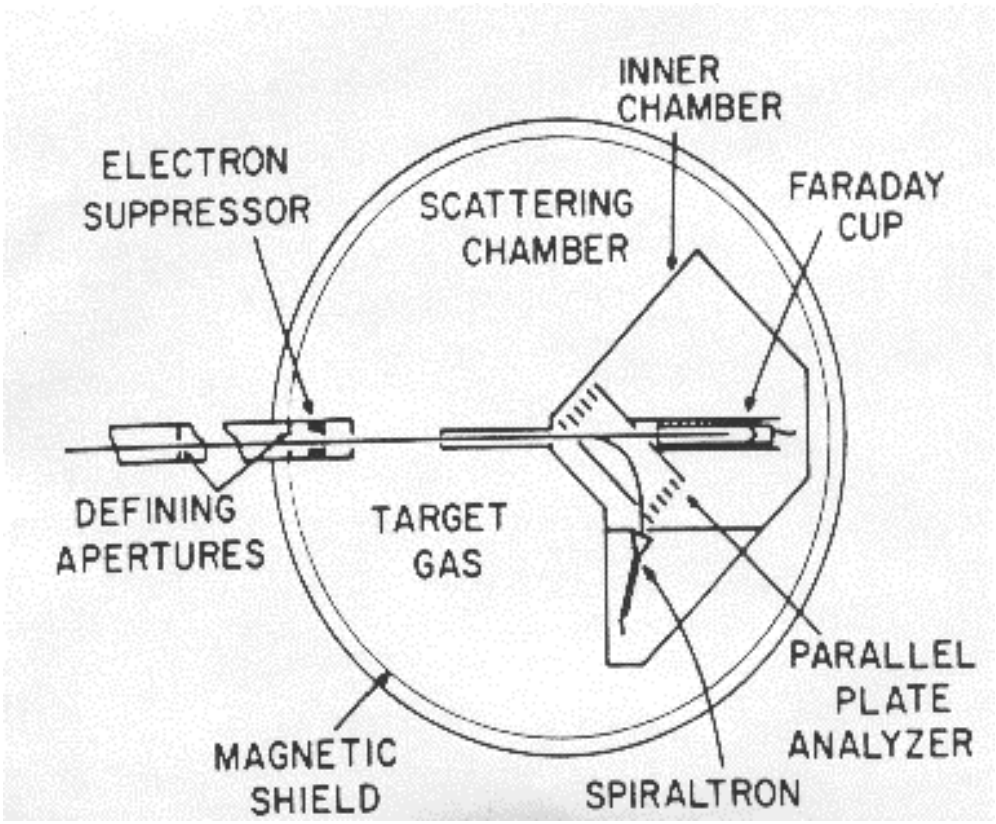

Figure 1.1: Typical traditional electron spectrometer. This particular spectrometer is designed to measure electrons emitted in the forward direction [1.10].

sections in 1963 [1.9]. To date, the general method for the majority of these measurements has been the use of electrostatic analyzers placed at various angles relative to the incoming projectile ion beam. A typical early electron spectrometer is shown in figure 1.1 [1.10].

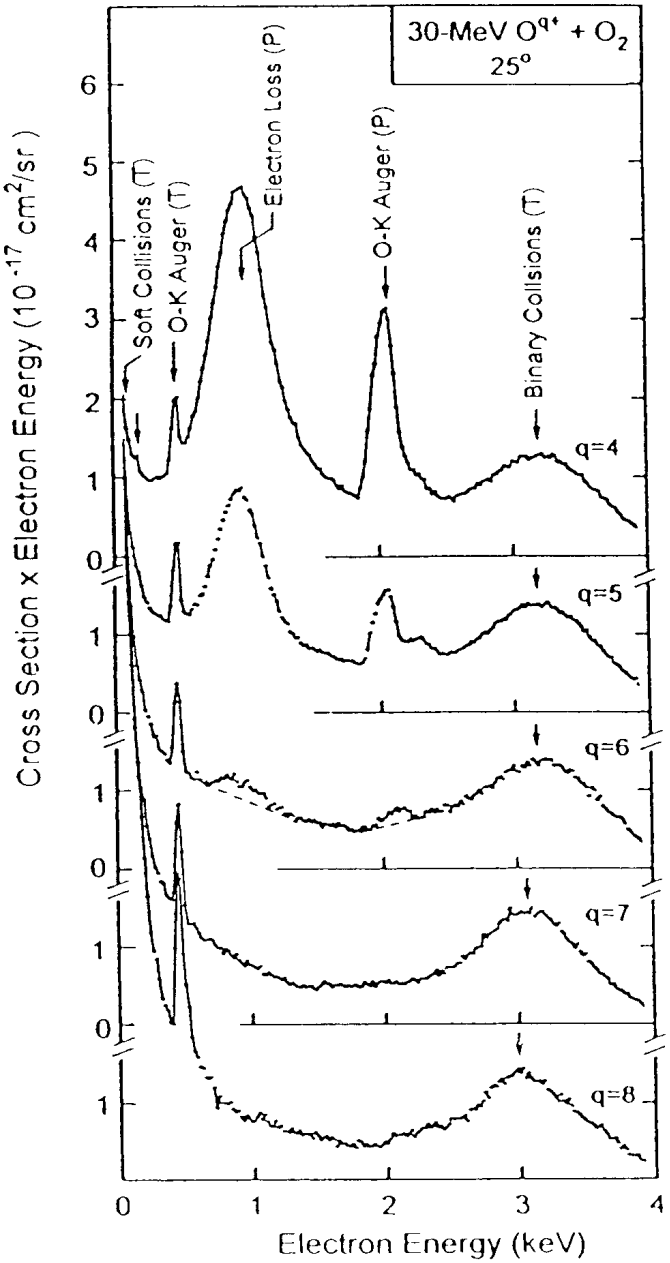

Figure 1.2: Electron spectrum from 30 MeV O^{q+} on molecular oxygen. See text for explanation of features [1.11].

Figure 1.2 shows typical electron spectra measured with an electrostatic analyzer [1.11]. This particular measurement was done for 30 MeV O^{q+} + O_2 at 25° and reveals many of the features that this technique has been used to study. Note that the cross section has been multiplied by the electron energy in order to emphasize the features of the spectrum, of which there are many types. The first is the autoionizing states (denoted as O-K auger) of the projectile and target. The second type is the hard collision peak "Binary Encounter (T)," which correspond to target electrons scattering off the projectile nucleus. The peak labeled "Electron Loss (P}" corresponds to projectile electrons released after interaction with the target atom. At the far left of each spectrum is the "soft" electron peak. In the q=8 case, this peak dominates the spectrum even though the cross section is multiplied by energy. The data in this figure don't go below 50 eV, and in spite of the enormous cross section, accurate measurements of electrons below 10 eV were until recently very rare. Figure 1.3 shows an *atypical* spectrum from measurements by L. Tribedi [1.12]. This is one of the few examples of electron cross section measurements for such low energies.

Over the past decade, another technique for the study of ion-atom collisions including ionization has been developed. Recoil-ion momentum spectroscopy (RIMS) allows for the momentum measurement of some (or all) of the outgoing particles in a collision. Recoil ions were first used as a tool to study ionization in 1979 by Cocke [1.13]. Later in the 1980's, groups reported successful attempts to measure the mean energies or momenta of such ions [1.14, 1.15]. However, these measurements were restricted to the momentum resolution allowed by the thermal motion of the target gas.

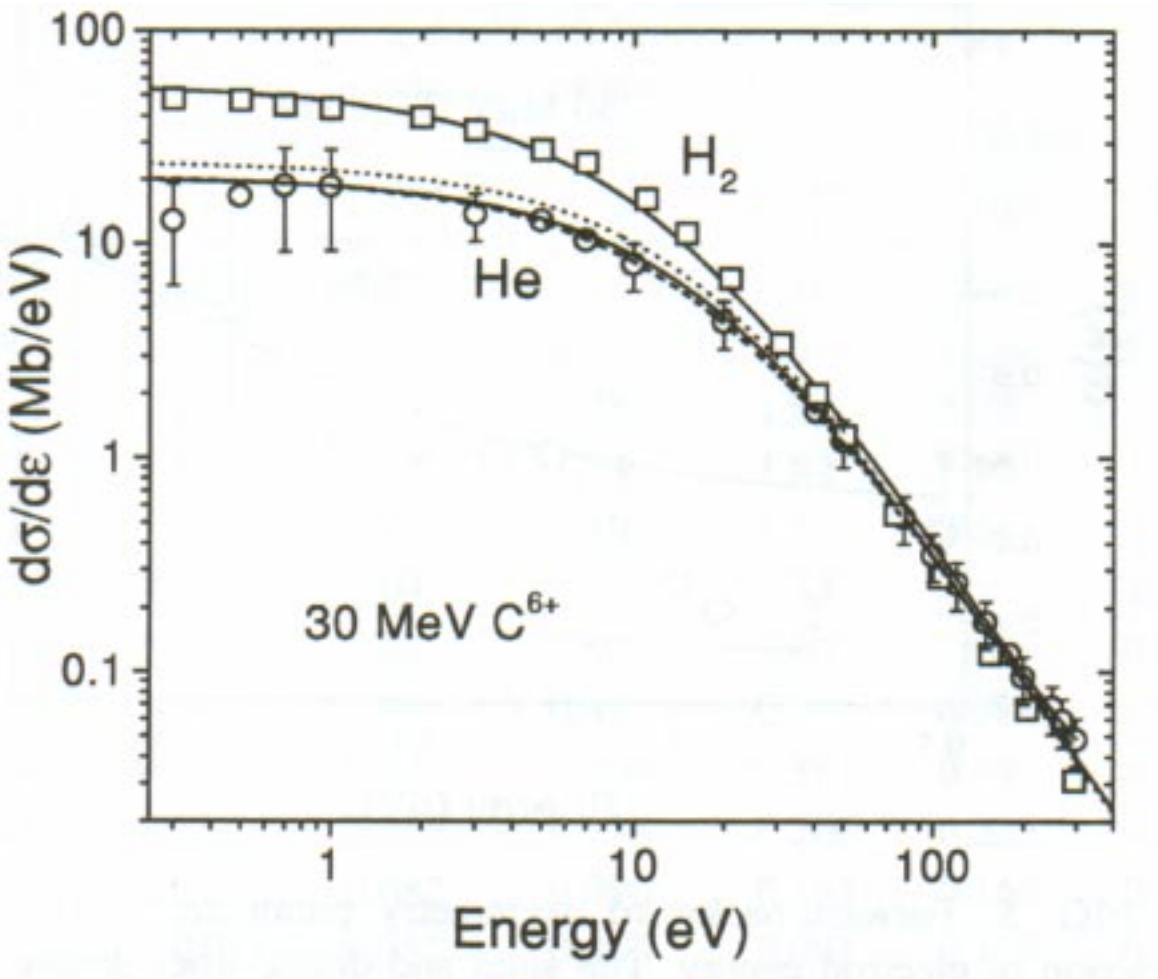

Figure 1.3: Single-differential cross sections ($d\sigma/d\varepsilon_e$) for 2.5-MeV/nucleon C^{6+} + He (circles) as a function of electron energy. The squares represent the data for 2.5-MeV/nucleon C^{6+} + H_2. The sold, dashed, and dotted lines represent CDW-EIS(HFS), CDW-EIS(H), and First Born calculations (from Tribedi *et al.* [1.1]).

This resolution improved by using cooled targets [1.16]. With the introduction of localized gas jets, the complete momentum vector of the recoil-ions could be reconstructed by extracting the ions with an electric field and then measuring their position and time of flight [1.17]. These improvements ultimately led to experiments that distinguished between electron-electron and electron-nucleus interaction contributions to projectile ionization, as well as scattering-angle and final-state distributions for capture reactions [1.18]. These and other developments are nicely documented in a topical review by Ulrich *et al* [1.19].

A natural extension of this technique was to use momentum imaging to measure the ejected electron momenta in addition to that of the recoil ion. At the time the work

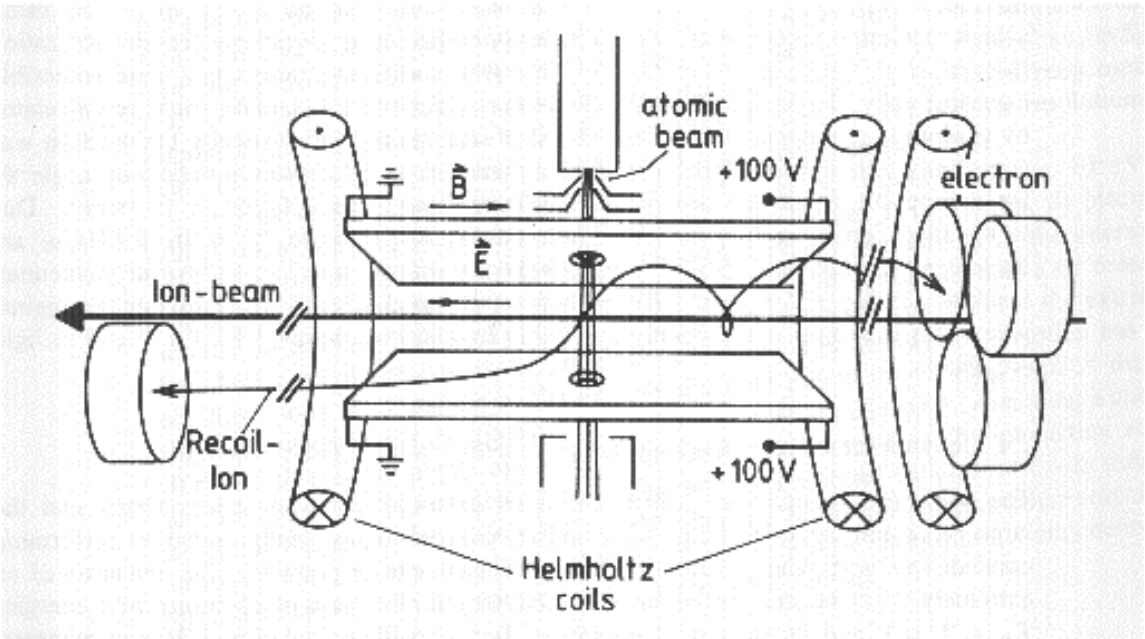

Figure 1.4: "Attosecond Microscope" introduced by Ulrich and Mosshammer [1.22]. The longitudinal magnetic field allows for lower electric fields and consequentially better electron momentum resolution in the TOF direction.

described in this dissertation began, there were very few experiments that had accomplished this, and those were limited to measurements of only two components of the electron momentum vector [1.20, 1.21]. This was due to the short electron flight time for typical extraction fields necessary to force the electrons to hit the detector. While a great deal of useful information was obtained with only these two momentum components, it was clearly desirable to have all three.

Two solutions to this problem were introduced at approximately the same time. The first (and probably most effective) was introduced by Mosshammer and Ullrich [1.22]. The solution was to place Helmholtz coils such that a magnetic field existed in the collision region along the axis of the electric field (Figure 1.4). This restricted the electrons to a particular radius on the detector determined by its energy in the detector plane. Therefore the electric field could be reduced, allowing for the measurement of the time-of-flight.

The other idea was to attempt to improve the resolution of the flight time measurement. Our particular approach (detailed in appendix D) was to "super-bunch" a projectile beam with one of the resonators in a linear accelerator. This allowed for extremely short bunch widths. Using the master bunch clock as a timing reference, we were able to achieve the resolution necessary to measure electron flight times. It was this idea that was the original motivation behind the first experiments described in chapter 2.

1.1.2 Ionization Theory

The behavior of the reactants in an ionizing collision is largely dependent upon the system parameters. The first order scaling parameter for perturbative treatments of these collisions is the quotient of the projectile charge and the projectile velocity (Z/v). This number is also useful as an indicator of the mechanisms that govern the behavior of electron emission. Take for example two extreme cases:

(1) Large Z/v: In the low velocity regime (where the collision velocity is slow compared with the characteristic orbital velocity of the electrons), the ion and atom behave together to some extent like a diatomic molecule. In the Born-Oppenheimer approximation, the projectile and target nucleus can be modeled as two slowly moving centers that are essentially static relative to the electronic motion. First introduced by Massey in the 1940's, the electronic behavior can then be approximated as a molecular state [1.23]. Recently, electrons produced in such collisions have been measured with imaging techniques. Some of these experiments have revealed a nodal structure in the electron momentum spectrum, which is suggestive of molecular behavior [1.20].

(2) Small Z/v: Conversely, in the very high velocity case, the mediator between the projectile and target is a fast electric field pulse, as the target atom undergoes little change before the projectile is long past. This pulse may be seen as the Fourier sum of wave harmonics and the collision therefore behaves much like ionization by a photon. This idea dates back to the 1930's as discussed by Bethe, Weizsacker, and Williams [1.24, 1.25]. Electrons produced in such collisions lie in a dipole pattern in momentum

space. In such a case, the electrons and recoil ions have equal and opposite momenta, and the longitudinal momentum distribution is symmetric about zero. Of course, due to conservation of momentum this implies that the momentum of the projectile stays essentially constant, which would be consistent with the small momentum carried by a mediating photon.

In the situation described above, the Plane-Wave Born Approximation is valid, and is the basis for most perturbative treatments of ion-atom collisions [1.26]. Because of the small momentum transfer from the projectile, it is treated as a plane wave that has perturbed the target system. The condition required in order for this assumption to be valid is $Z_p/Z_t < v_p/v_0$, where Z_p and Z_t are the projectile and target nuclear charges; v_p and v_0 are the projectile and Bohr velocities.

The collision systems discussed in this dissertation, particularly the work described in chapter 4, were in a velocity regime somewhere between the extreme cases above. In this case, the assumptions required for the above models are not strictly realized, and we must look to other sources of theory. Among the various theoretical calculations that deal with the ionization process, two have proven most useful in comparison with this work. The first is the continuum distorted wave (CDW) calculation. The initial and final wave functions are distorted by taking into account the Coulomb potential of the projectile. This calculation was first introduced by Cheshire in 1964 to study resonant capture for the collision system $H^+ + H(1s) \rightarrow H(1s) + H^+$ [1.26]. In 1978, Belkic' used this method for calculations of ionization of atoms by heavy ions [1.28]. Calculations for our experiments were done by O'Rourke and Crothers [1.29].

They calculated the final state longitudinal momentum distributions of the ejected electron and recoil-ion for the single ionization of helium-like targets. They have published similar calculations and a description of the method for the single ionization of He by 3.6 MeV/u Ni^{24+} ions [1.30]. Because our measurements are very differential in nature, they would benefit from a calculation that determined the transverse behavior of the interacting particles as well. To accomplish this, the internuclear potential must be included in the CDW calculation. Rodriguez has presently done calculations for single ionization of He [1.31]. Calculations for direct comparison to our results were not available at the time of this writing.

The other theory used to compare with this work were classical trajectory Monte Carlo (CTMC) calculations done by Olson [1.32]. These calculations were first introduced by Hirschfelder in 1936, and were done with a mechanical calculator [1.33]. The history and techniques are well documented by Olson in *Atomic, Molecular, & Optical Physics Handbook* [1.34]. The theory uses classical physics and solves the scattering problem numerically. The initial target is made up of a distribution of states based in quantum mechanics. In principle, the calculations may be thought of as a virtual scattering experiment. One at a time, projectiles fly by the target atom and cross-sections for different reaction channels are determined by summing the events for each final state of interest. Due to the rapid increase in computer power, these calculations have been able to become more detailed, just as the experiments allow for more highly differential measurements. Because the calculations produce histograms in much the

same way a laboratory experiment does, comparison between theory and measurement is easily facilitated.

1.2 Overview of Dissertation

The work presented in this dissertation consists of three distinct projects. The common thread among these is the use of a momentum imaging technique to study the production of low energy continuum electrons produced in collisions between fast ions and atomic or molecular targets. Each of the following chapters is a description of work that, to some extent, could stand alone as a complete experiment. They are presented chronologically. As the apparatus, and our development of the techniques we used evolved, the experiments became more detailed in the physics studied.

Chapter 2: Momentum Imaging of Soft Electrons

The first group of experiments was performed as the first use of momentum imaging to fully measure the momentum of soft electrons produced in fast ion-atom collisions. This was accomplished through the use of the Kansas State Super-Conducting Linear Accelerator (LINAC) as a time focusing device to produce projectile ion-bunches with sub-nanosecond width (see appendix C). By comparing our results to those of state-of-the-art electron spectroscopy, we were able to demonstrate not only the feasibility of the technique, but gained a glimpse of the possibilities to which it led.

Chapter 3: Momentum Imaging of Soft Electrons from Spatially Aligned Molecules

We then moved on to fully realize the power of this technique. Further refinement of the apparatus allowed us to measure the electron momentum in coincidence with the momentum of the remaining target nuclei. This led to the study of electron spectra associated with aligned Deuterium molecules, as well as kinematically complete measurements of the single ionization of Helium atoms.

In the case of a deuterium (D_2) target, the apparatus allowed us to determine the alignment of the molecule relative to the beam axis. This was accomplished through the momentum measurement of the recoil target nuclei. It was our goal to answer two particular questions. First, we wanted to determine the effect of this alignment on the likelihood for the molecule to break up into its constituent parts (in this case including at least one D^+ fragment). Of even more interest was the comparison of the electron momentum distribution associated with particular internuclear alignments, namely parallel or perpendicular to the beam axis.

Chapter 4: Momentum Imaging of Soft Electrons Correlated to Target and Projectile Momentum Transfer

The other reaction that was the subject of considerable study was the single ionization of Helium (He) by projectiles of various charge states (from 1 to 9) and velocities (between 6 and 14 a.u.). Because we measured the full momentum vector of

both the electron and the recoiling target nucleus (recoil-ion), it was straightforward to infer the momentum transferred to the projectile in the collision. This allowed a direct study of the three-body dynamics for various collision systems. One goal of the analysis was to discern the relative strengths of the individual two-body interactions within the collision and the behavior of these as we varied the velocity and charge of the projectile beam. Also presented will be a comparison of our data to that of related experiments and theoretical calculations.